FISHER & PAYKEL

# 606L SERIES 7 QUAD DOOR REFRIGERATOR FREEZER THROUGH DOOR ICE & WATER

27022-A RF620QNTVX1

**SPARE PART GUIDE**

**AA**

# INTRODUCTION

### Voltage

220 –240 50Hz

### Kit parts

Where a part number is shown against the descriptions for kit components, they are also available as separate items. In addition, some parts may be supplied with these kits that are not available as separate items, and are therefore either not listed, or a part number is not shown against the part description in this guide.

### Part list key

You may see one or more 'keys' in the first column of the part list tables, see below for explanations:

| | |
|---|---|
| NI | Indicates the part is not illustrated in the diagram. |
| NOT USED | Indicates the diagram part is not used in this manual. |
| NS | Indicates the part is not servicable. |
| NM | Not available for this model. |

For more information about our products and services, and for detailed contact information, visit our website:

**NZ** https://www.fisherpaykel.co.nz
**AU** https://www.fisherpaykel.com.au

# CONTENTS


| | |
|---|---|
| DOOR COMPONENTS | 3 |
| INTERNAL CABINET COMPONENTS | 9 |
| DUCT COMPONENTS | 13 |
| EXTERNAL CABINET COMPONENTS | 17 |
| TERMINAL, PLUGS & SOCKETS | 21 |
| REAR CABINET COMPONENTS | 23 |

# DOOR COMPONENTS

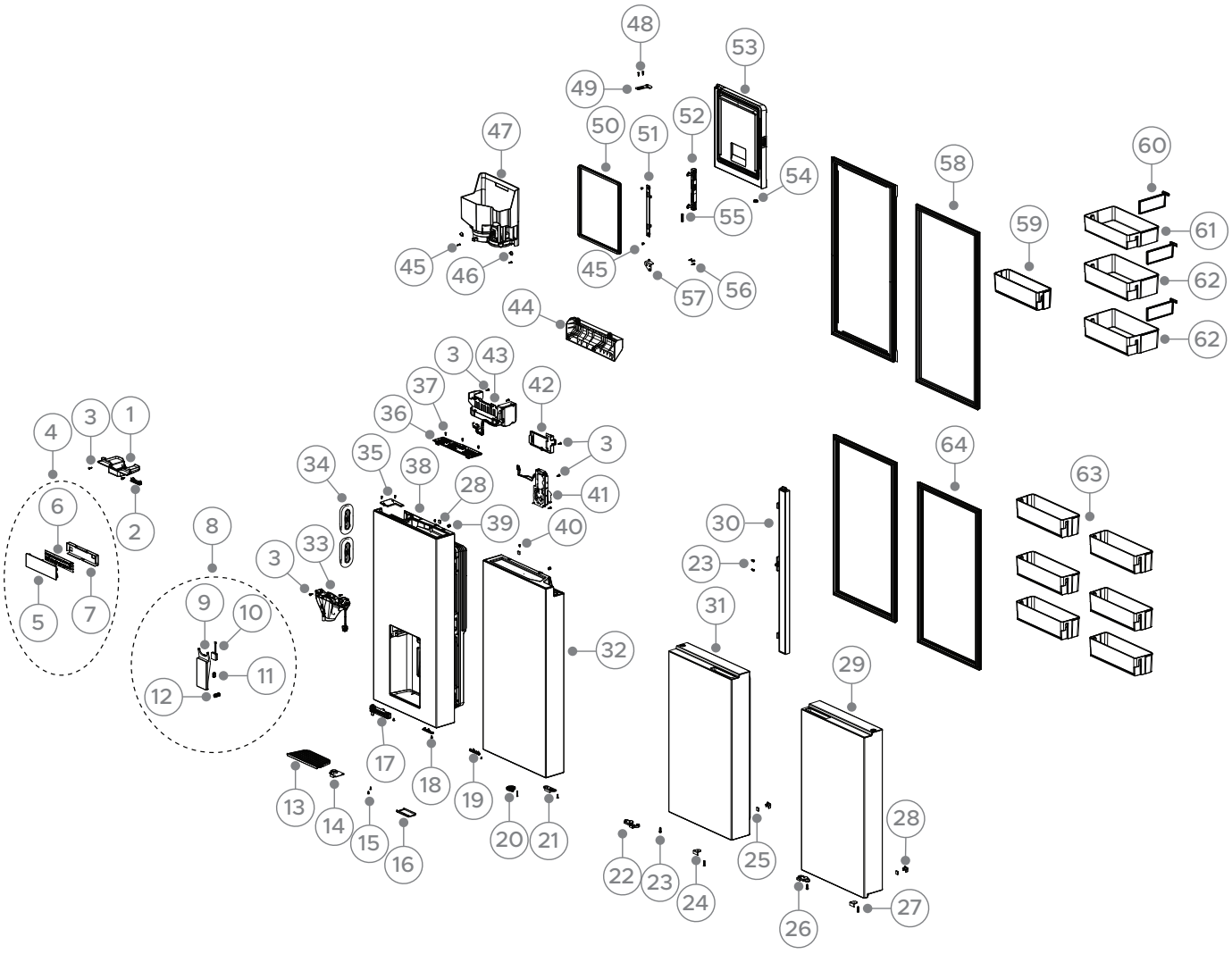

# DOOR COMPONENTS

| PART | PART NUMBER | PART DESCRIPTION |
|---|---|---|
| 1 | **H0060888572** | DISPENSER TOP COVER ASSY |
| 2 | **H0060888653** | LIGHT DISPLAY IW RF620 |
| 3 | **H0064098068** | SCREW PHILIPS SELF TAPPING |
| 4 | **H0060887920** | MOD DISP EXT SS TDIW |
| | INCLUDES H0060887917 | FASCIA EXT SS TDIW |
| | INCLUDES H0061801534A | DISPLAY BOARD PCBA |
| | INCLUDES H0060269738 | HOUSING DISP EXT TDIW |
| 5 | **H0060887917** | FASCIA EXT SS TDIW |
| 6 | **H0061801534A** | DISPLAY BOARD PCBA |
| 7 | **H0060269738** | HOUSING DISP EXT TDIW |
| 8 | **H0060888568** | PADDLE SS ASSY |
| | INCLUDES H0060269908 | PADDLE GREY |
| | INCLUDES H0064003091 | MOTION SENSOR |
| | INCLUDES H0064002360 | SWICTCH MICRO |
| | INCLUDES H0060124430 | PADDLE SPRING |
| 9 | **H0060269908** | PADDLE GREY |
| 10 | **H0064003091** | MOTION SENSOR |
| 11 | **H0064002360** | SWICTCH MICRO |
| 12 | **H0060124430** | PADDLE SPRING |
| 13 | **H0060271588** | DRIP TRAY SS ASSY |
| 14 | **H0060240823** | STOPPER DOOR |
| 15 | **H0060801032** | SCREW |
| 16 | **H0060251720A** | CLOSER LID DOOR SATINA |
| 17 | **H0060858884A** | CLOSER DOOR |
| 18 | **H0010600332** | SCREW |
| 19 | **H0060858426A** | LAMP FREEZER |
| 20 | **H0060247184** | CLOSING HOOK |
| 21 | **H0060229662** | CLOSING HOOK RH |
| NI | **H0060219812** | BEARING DOOR FC |
| 22 | **H0060242209** | HOOK CLOSING |
| 23 | **H0060802013** | SCREW |
| 24 | **H0060117465** | DOOR STOP |
| 25 | **H0060301585** | DOOR MAGNET |

# DOOR COMPONENTS

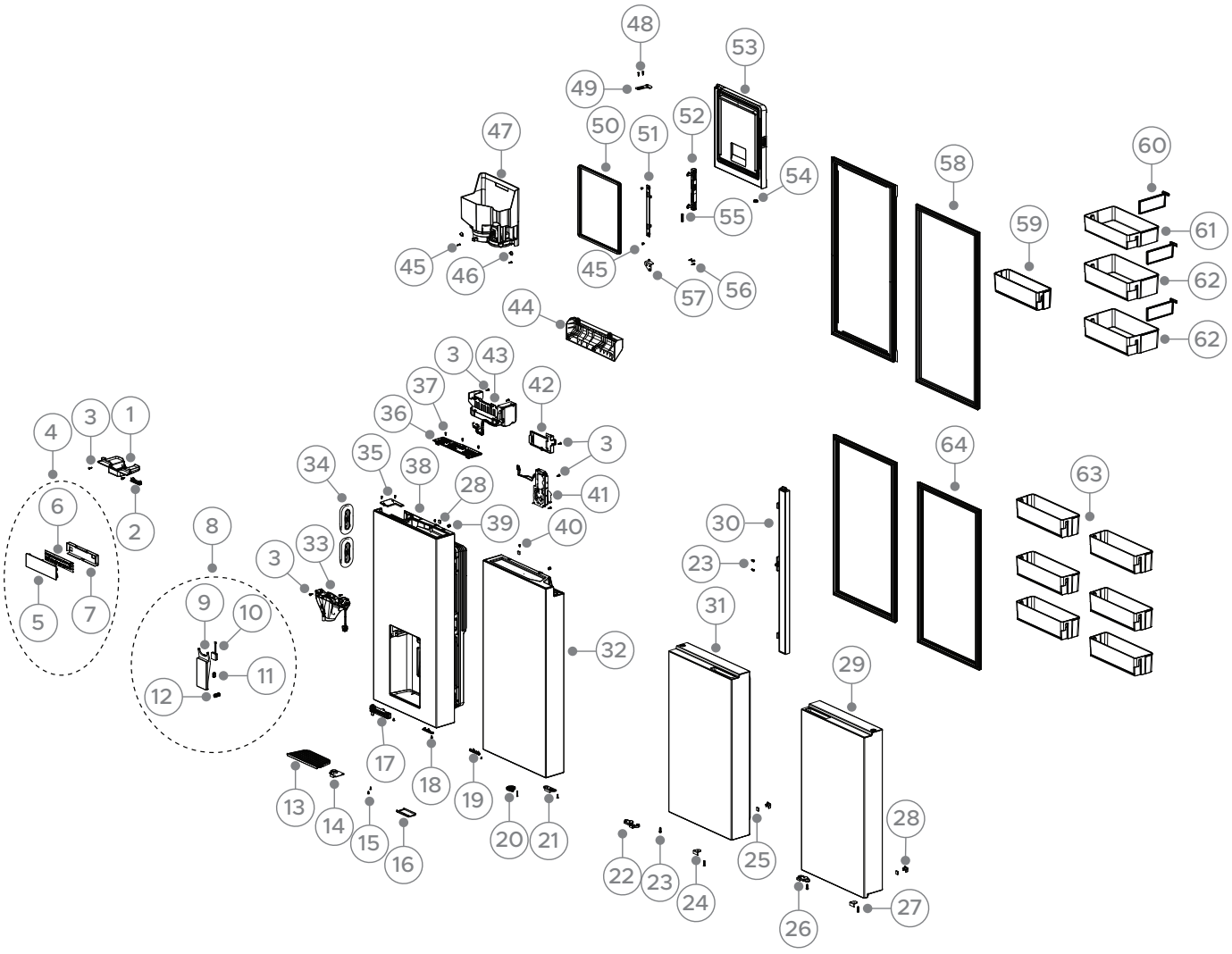


DWG 007544

# DOOR COMPONENTS

| PART | PART NUMBER | PART DESCRIPTION |
|---|---|---|
| 26 | H0060229662B | CLOSING HOOK VTZ RH |
| 27 | H004HR49G05R | SCREW (CLOSING HOOK) |
| 28 | H0060242169 | COVER MAGNET |
| 29 | H0060886947 | DOOR VTZ |
| 30 | H0060858473F | FLAPPER ASSY |
| 31 | H0060886946 | DOOR FC |
| 32 | H0060886945 | DOOR PC RH |
| 33 | H0060870466B | SPIGOT WATER DISPENSER |
| 34 | H0060252045 | DUCT SEALING |
| 35 | H0060251724A | COVER ENDCAP TOP LH |
| 36 | H0060871570H | BOARD CONTROL IM ASSY GREY |
| 37 | H0064082855 | SCREW CROSS GROOVE SELF ATTACH |
| 38 | H0060886948 | DOOR PC LH |
| 39 | H0060230608 | STOPPER DOOR SCREW-ON |
| 40 | H0060600186 | SCREW FLAPPER |
| 41 | H0064002117C | MOTOR ICE CRUSHER |
| 42 | H0060251577 | BOX TERMINAL IM |
| 43 | H0060864717 | ICEMAKER ASSY |
| 44 | H0060269739 | COVER DOOR LINER |
| 45 | H0064098047 | SCREW |
| 46 | H00602160304K | CAP SCREW WHITE |
| 47 | H0060870465 | BIN ICE |
| 48 | H0000600012B | SCREW ICE BOX DOOR |
| 49 | H0060124787 | HINGE IM TOP |
| 50 | H0060252051 | GASKET DOOR IM |
| 51 | H0060251845 | HOOK LID LATCH |
| 52 | H0060251844 | HOUSING LID LATCH |
| 53 | H0060868430B | DOOR IM ASSY |
| 54 | H0060223701 | STOPPER |
| 55 | H0060600074 | SPRING COMPRESSION |
| 56 | H0000600012B | SCREW ICE BOX HINGE |
| 57 | H0060124876 | HINGE IM BTM |
| 58 | H0060825978DX | GASKET PC |
| 59 | H0060269919 | SHELF DOOR NARROW |
| 60 | H0060269918 | DIVIDER SHELF |

# DOOR COMPONENTS

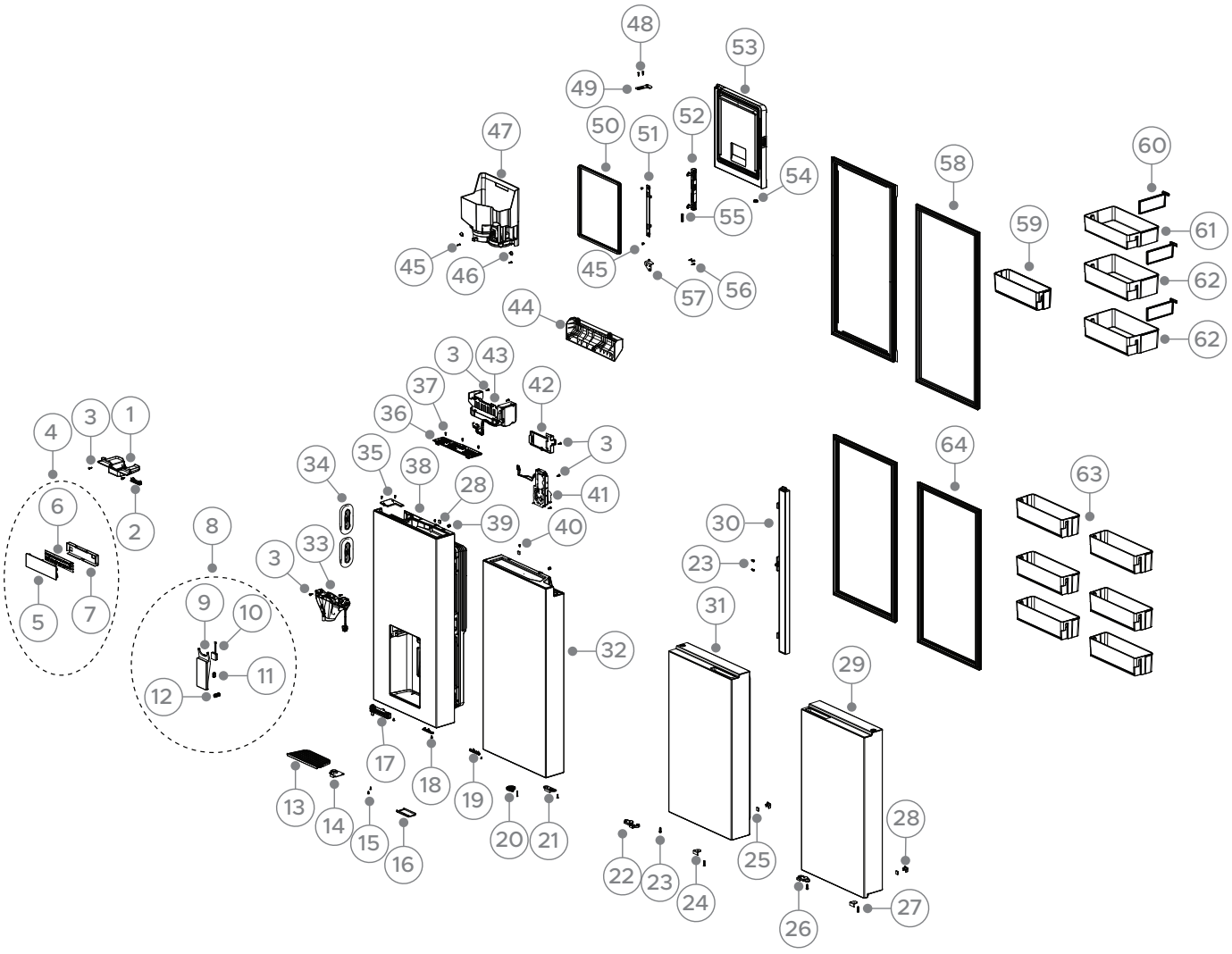


DWG 007544

# DOOR COMPONENTS

| PART | PART NUMBER | PART DESCRIPTION |
|---|---|---|
| 61 | H0060269712 | SHELF DOOR WIDE |
| 62 | H0060269716 | SHELF DOOR GALLON |
| 63 | H0060269719 | SHELF DOOR FC/VTZ |
| 64 | H0060825978DY | GASKET FC ASSY |
| NI | H0060129369 | SPANNER DOOR ADJUSTMENT |

# INTERNAL CABINET COMPONENTS

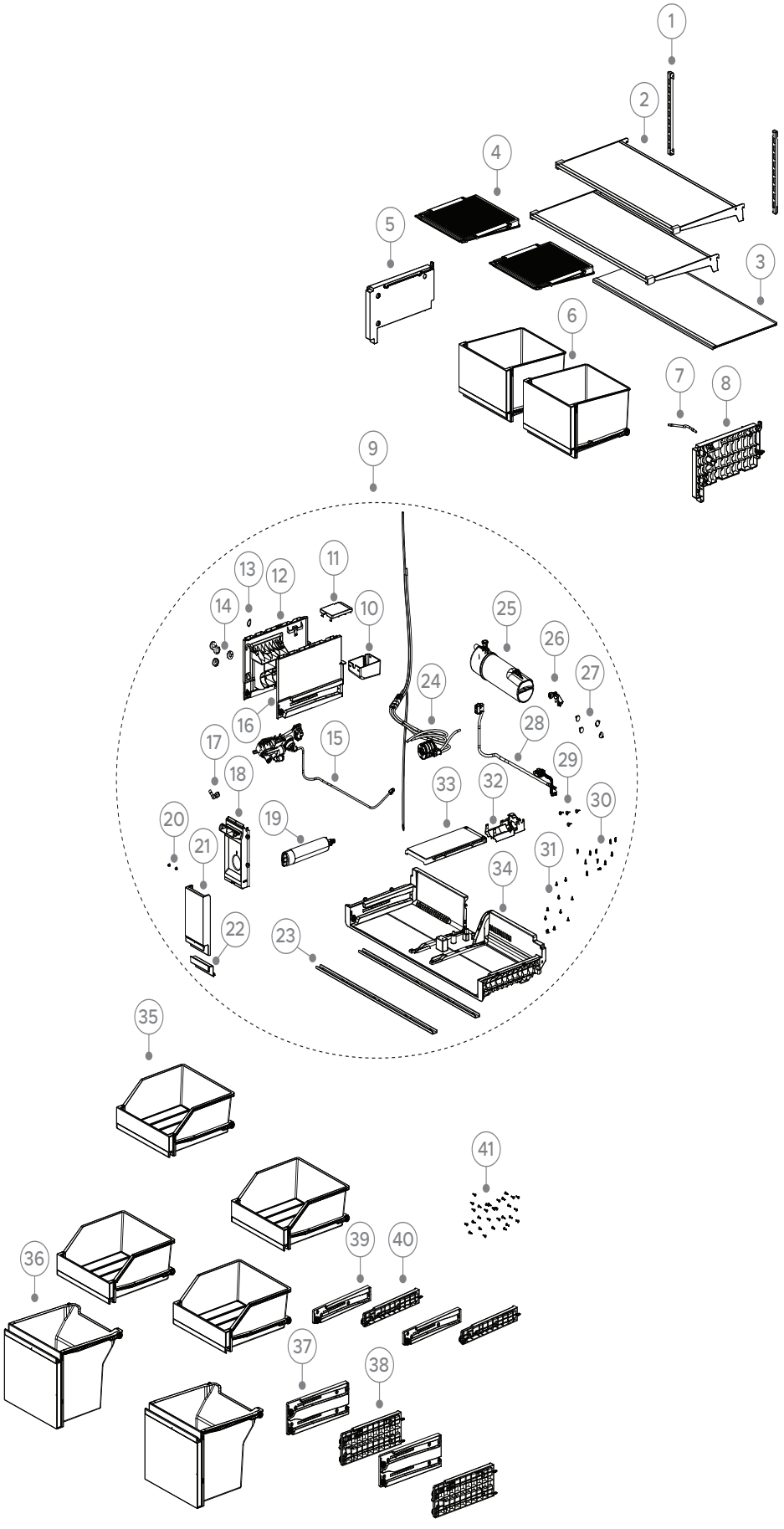


DWG 007545

# INTERNAL CABINET COMPONENTS

| PART | PART NUMBER | PART DESCRIPTION |
|---|---|---|
| 1 | **H0060130504** | BRACKET SHELF CANTILEVER |
| 2 | **H0060869655A** | SHELF CANTILEVER |
| 3 | **H0060869658C** | SHELF RETAINER LID CRISPER BIN |
| 4 | **H0060269046** | HUMIDITY CONTROL LID |
| 5 | **H0060269052** | SUPPORT RETAINER SHELF LH |
| 6 | **H0060886578** | DRAWER PC |
| 7 | **H0060271728** | PIPE WATER |
| 8 | **H0060269052A** | SUPPORT RETAINER SHELF RH |
| 9 | **H0060886576A** | BRACKET FILTER MODULE ASSY |
| | INCLUDES H0060236202H | BASE WATER FILTER |
| | INCLUDES H0060269768 | COVER TERMINAL BOX |
| | INCLUDES H0060269767 | TERMINAL BOX |
| | INCLUDES H0060269062 | BRACKET MID SLIDE LH PC |
| | INCLUDES H0060201200 | CAPILLARY TUBE BRACKET |
| | INCLUDES H0060230195 | WHEEL |
| | INCLUDES H0060269063 | BRACKET MID SLIDE RH PC |
| | INCLUDES H0064002382A | WATER VALVE |
| | INCLUDES 847200 | FILTER WATER REF FWC3 |
| | INCLUDES H0060247755 | CONNECTOR WATER PIPE |
| | INCLUDES H0060269065 | LID FILTER |
| | INCLUDES H0060255461 | SPACER RUBBER |
| | INCLUDES H0060269054 | COVER FILTER FRONT |
| | INCLUDES H0060138109A | COVER FILTER FRONT-ALUMINIUM |
| | INCLUDES H0060883607 | TANK WATER |
| | INCLUDES H0060269831 | JOINT ASSEMBLY |
| | INCLUDES H00602160304K | CAP SCREW WHITE |
| | INCLUDES H0060405869 | VALVE WATER CONNECTION LINE |
| | INCLUDES H0060220008 | NAIL RUBBER |
| | INCLUDES H0060853565 | FILTER BRACKET WATER |
| | INCLUDES H0060251650A | COVER FILTER TOP |
| | INCLUDES H0064098047 | SCREW |
| | INCLUDES H0060269059 | BIN CARRIER ASSY |
| | INCLUDES H0060600185 | SCREW |
| | INCLUDES H0060128564 | RAIL STIFFENING BASE |

# INTERNAL CABINET COMPONENTS

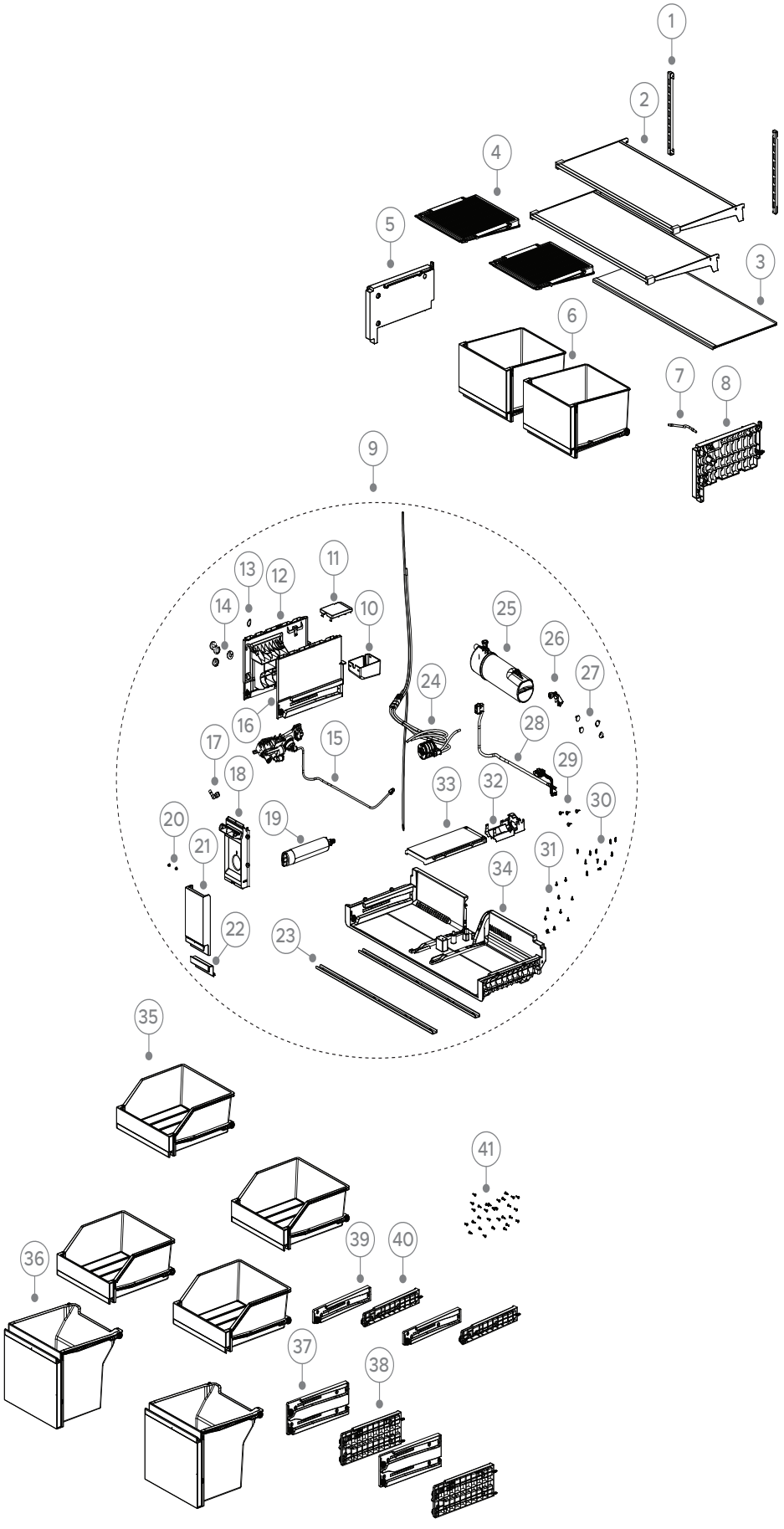


DWG 007545

# INTERNAL CABINET COMPONENTS

| PART | PART NUMBER | PART DESCRIPTION |
|---|---|---|
| 10 | H0060269767 | TERMINAL BOX |
| 11 | H0060269768 | COVER TERMINAL BOX |
| 12 | H0060269062 | BRACKET MID SLIDE LH PC |
| 13 | H0060201200 | CAPILLARY TUBE BRACKET |
| 14 | H0060230195 | WHEEL |
| 15 | H0064002382A | WATER VALVE |
| 16 | H0060269063 | BRACKET MID SLIDE RH PC |
| 17 | H0060247755 | CONNECTOR WATER PIPE |
| 18 | H0060269065 | LID FILTER |
| 19 | 847200 | FILTER WATER REF FWC3 |
| 20 | H0060255461 | SPACER RUBBER |
| 21 | H0060269054 | COVER FRONT FILTER |
| 22 | H0060138109A | COVER FILTER FRONT-ALUMINIUM |
| 23 | H0060128564 | RAIL STIFFENING BASE |
| 24 | H0060236202H | BASE WATER FILTER |
| 25 | H0060883607 | TANK WATER |
| 26 | H0060269831 | JOINT ASSEMBLY |
| 27 | H00602160304K | CAP SCREW WHITE |
| 28 | H0060405869 | VALVE WATER CONNECTION LINE |
| 29 | H0060220008 | NAIL RUBBER |
| 30 | H0064098047 | SCREW |
| 31 | H0060600185 | SCREW |
| 32 | H0060853565 | FILTER BRACKET WATER |
| 33 | H0060251650A | COVER FILTER TOP |
| 34 | H0060269059 | BIN CARRIER ASSY |
| 35 | H0060886580 | TRAY FC ASSY |
| 36 | H0060886581 | TRAY BTM DRAWER FC ASSY |
| 37 | H0060871605 | SLIDE DRAWER LOWER FC LH |
| 38 | H0060871605A | SLIDE DRAWER LOWER FC RH |
| 39 | H0060871606 | SLIDE TRAY ASSY FC LH |
| 40 | H0060871606A | SLIDE TRAY ASSY FC RH |
| 41 | H0060600097 | SCREW |

# DUCT COMPONENTS

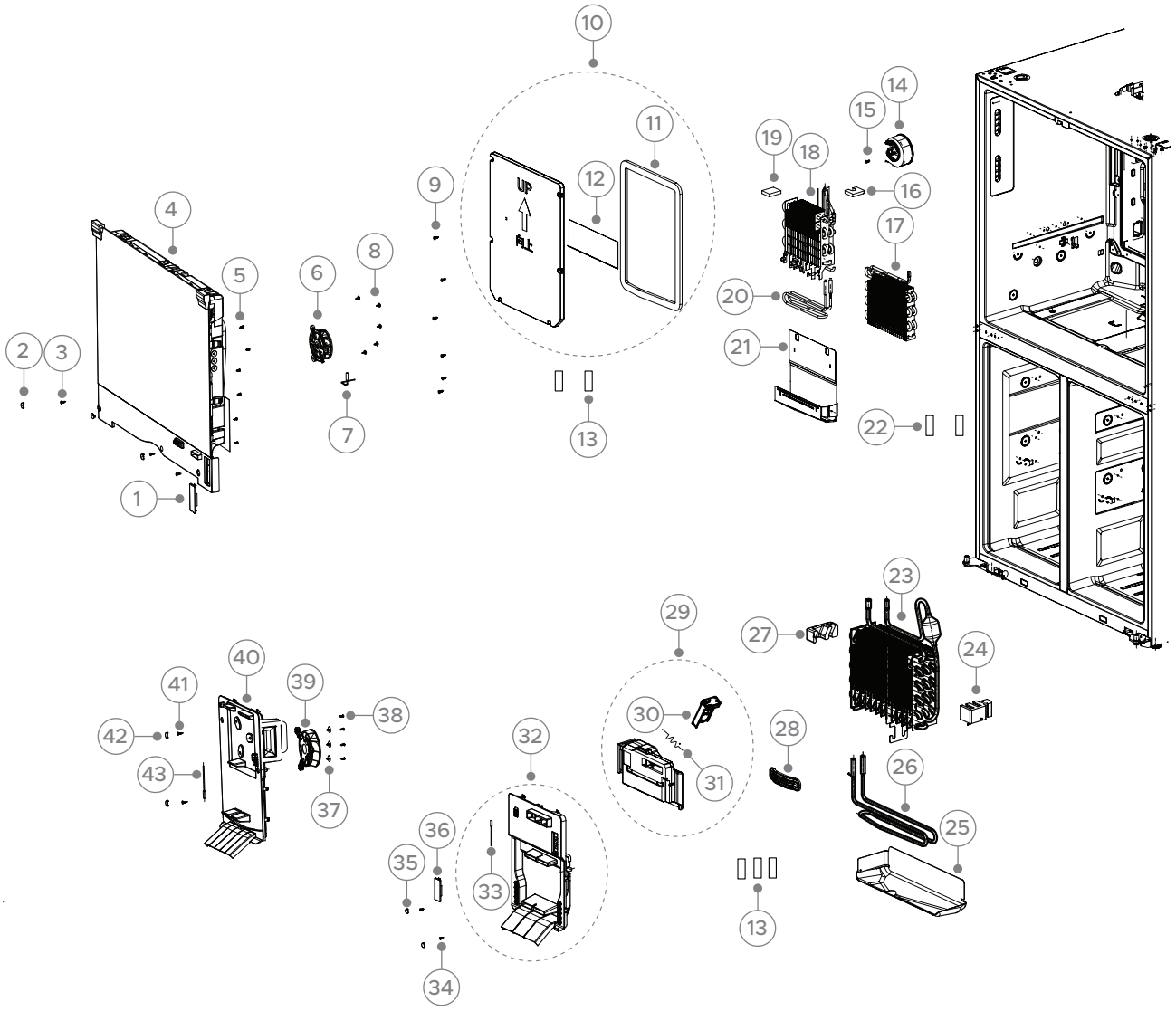


DWG 007546

# DUCT COMPONENTS

| PART | PART NUMBER | PART DESCRIPTION |
|---|---|---|
| 1 | H0060222026 | FREEZER AIRFLOW DUCT CABLE COV |
| 2 | H00602160304K | CAP SCREW WHITE |
| 3 | H0060600097 | SCREW |
| 4 | H0060886930 | DUCT PC ASSY |
| 5 | H0060802008 | SCREW |
| 6 | H0064001939B | FAN PC FC 4 WIRE |
| 7 | H0060401425C | SENSOR REF AMBIENT |
| 8 | H0060600002 | SCREW |
| 9 | H0060600343 | SCREW FAN |
| 10 | H0060870722 | DOOR EVAP ASSY |
| | INCLUDES | DOOR |
| | INCLUDES H0060312440 | FOIL |
| | INCLUDES H0060312439 | GASKET DOOR EVAP ICEMAKER |
| 11 | H0060312439 | GASKET DOOR EVAP ICEMAKER |
| 12 | H0060312440 | FOIL |
| 13 | H0064000025 | SENSOR TYPE B |
| 14 | H0064002353B | FAN COMPACT FRZ |
| 15 | H0060600121 | SCREW |
| 16 | H0060312687 | HOUSING EVAP IM RH |
| 17 | H0060706047A | EVAPORATOR PC |
| 18 | H0060707428 | EVAPORATOR IM |
| 19 | H0060312686 | HOUSING EVAP IM LH |
| 20 | H0064002086A | HEATER DEFROST IM |
| 21 | H0060130502 | CONTAINER DRIP TRAY EVAP IM |
| 22 | H0064000024 | SENSOR TYPE A |
| 23 | H0060706905A | EVAPORATOR FC |
| 24 | H0060312685 | HOUSING EVAPORATOR RH |
| 25 | H0060130503 | TRAY DRIP EVAP FC |
| 26 | H0064002027 | HEATER DEFROST FC |
| 27 | H0060312688 | HOUSING EVAPORATOR LH |
| 28 | H0060241552 | COVER PIPE SUCTION |
| 29 | H0060871304 | COVER AIR DUCT UPPR SWITCHZONE |
| | INCLUDES | COVER |
| | INCLUDES H00609340017 | DAMPER AIR |
| | INCLUDES H0060401766A | SENSOR TEMPERATURE |

# DUCT COMPONENTS

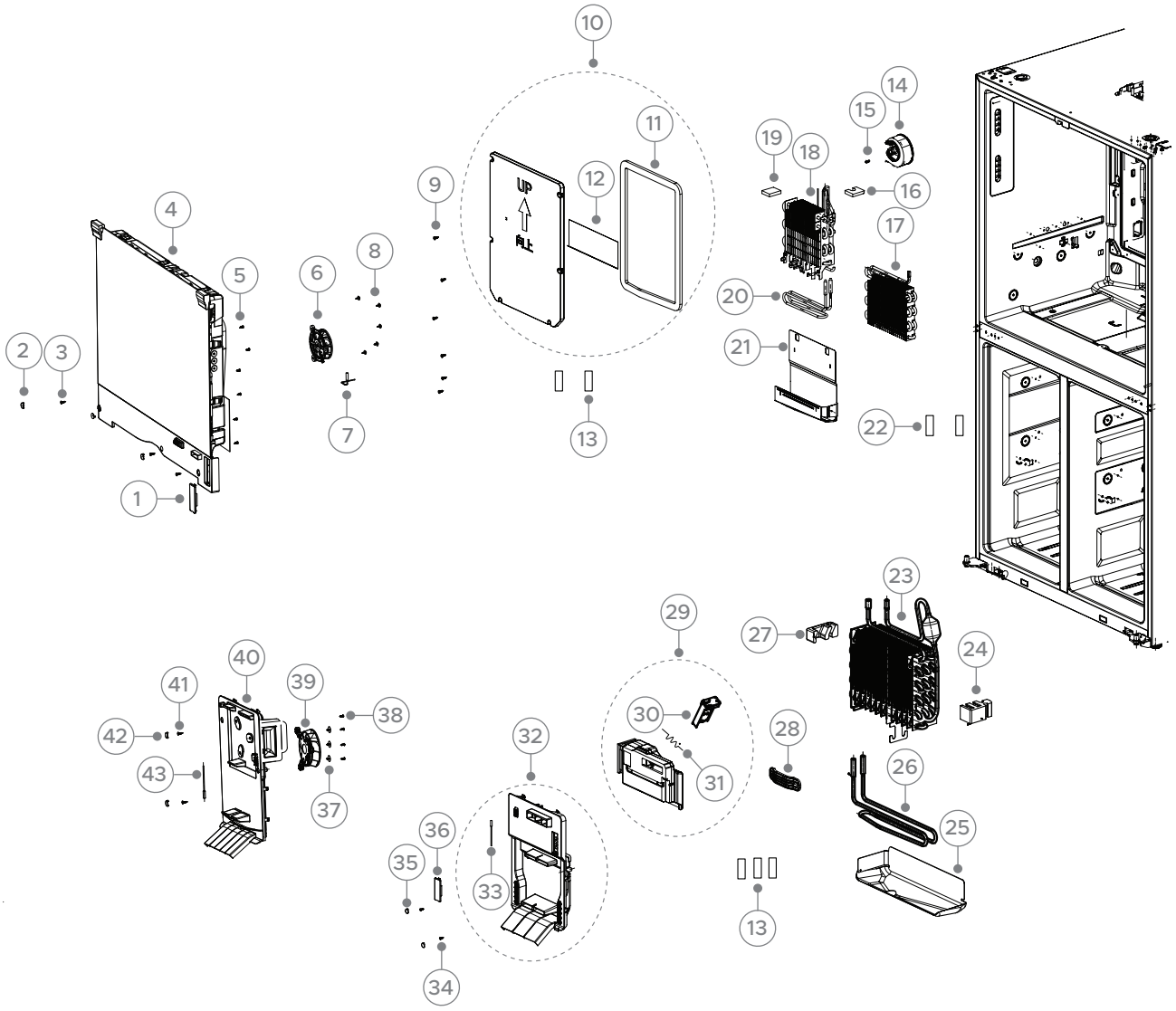


DWG 007546

# DUCT COMPONENTS

| PART | PART NUMBER | PART DESCRIPTION |
|---|---|---|
| 30 | H00609340017 | DAMPER AIR |
| 31 | H0064002787 | HEATER AUXILLARY DAMPER |
| 32 | H0060871305 | COVER AIR DUCT LWR SWITCHZONE |
| | INCLUDES | COVER |
| | INCLUDES H0060401766A | SENSOR TEMPERATURE |
| 33 | H0060401766A | SENSOR TEMPERATURE |
| 34 | H0060600097 | SCREW |
| 35 | H00602160304K | CAP SCREW WHITE |
| 36 | H0060222026 | FREEZER AIRFLOW DUCT CABLE COV |
| 37 | H0060600002 | SCREW |
| 38 | H0060802008 | SCREW |
| 39 | H0064002766S | SHIELD FAN FRZ |
| 40 | H0060886836 | FREEZER DUCT COVER ASSEMBLY |
| 41 | H0060600097 | SCREW |
| 42 | H00602160304K | CAP SCREW WHITE |
| 43 | H0060402182A | CABLE SENSOR FREEZER |

# EXTERNAL CABINET COMPONENTS

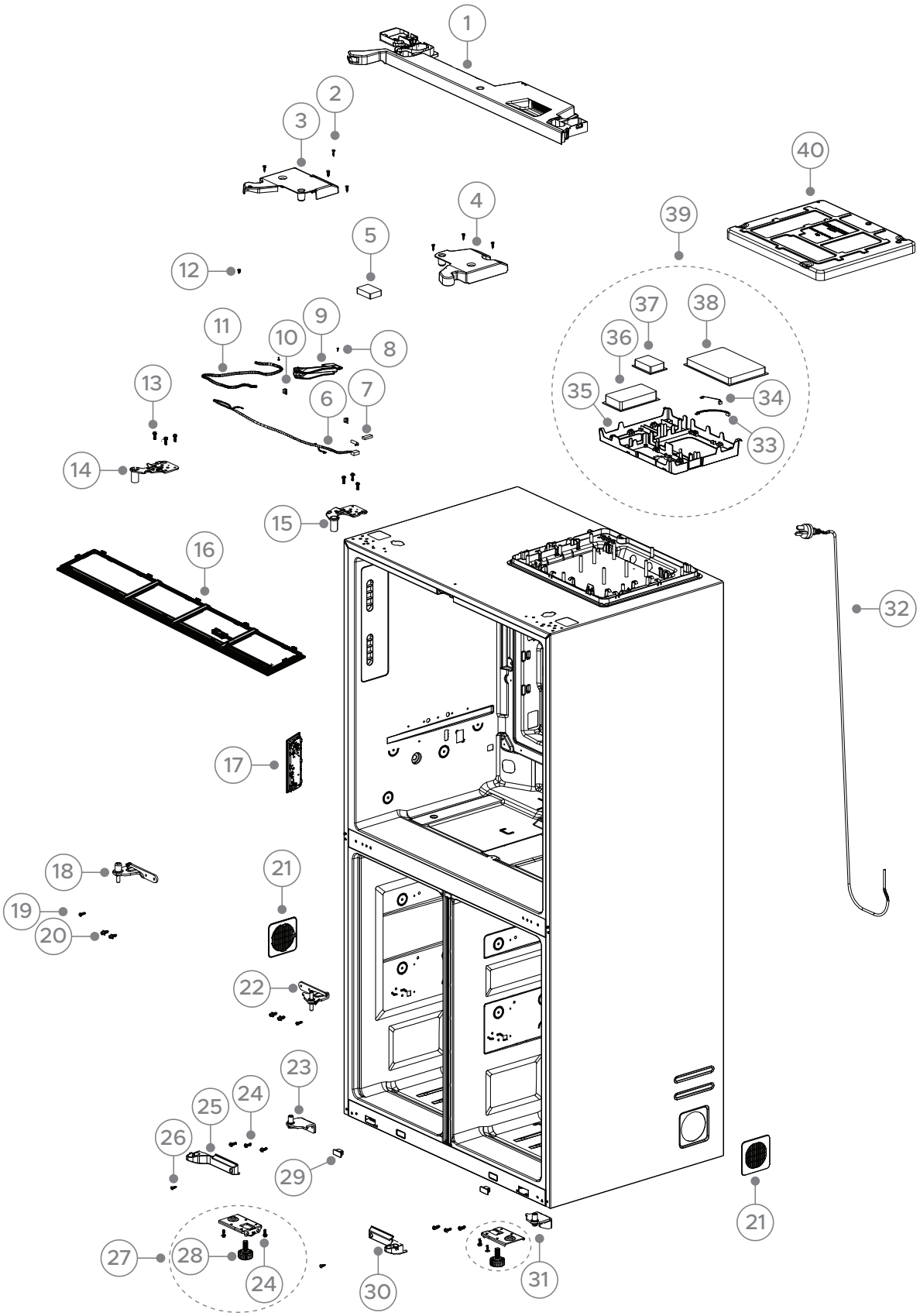


DWG 007547

# EXTERNAL CABINET COMPONENTS

| PART | PART NUMBER | PART DESCRIPTION |
|---|---|---|
| 1 | H0060871777C | HINGE MID TOP |
| 2 | H0060600097 | SCREW |
| 3 | H0060273257 | HINGE TOP LH |
| 4 | H0060240800D | HINGE TOP RH |
| 5 | H0061801208 | MODULAR WIFI |
| 6 | H0060404397B | CABLE COVER HINGE TOP |
| 7 | H0064002683 | SENSOR HUMIDITY |
| 8 | H006-0040600024 | SCREW ST29*9 65MN |
| 9 | H0060251785C | CABLE BOX FIXINGS |
| 10 | H0064001332 | MAGNET SWITCH DOOR |
| 11 | H0060889189 | CABLE ASSY |
| 12 | H0060600186 | SCREW FLAPPER |
| 13 | H0060600017 | SCREW |
| 14 | H0060116388A | HINGE TOP LH |
| 15 | H0060116389 | HINGE PC TOP |
| 16 | H0064003283A | LIGHT CEILING PANEL |
| 17 | H0060887919 | MOD TFT DISP INTERNAL |
| 18 | H0060125308A | HINGE MID LH |
| 19 | H0077010057 | SCREW |
| 20 | H0060600165B | SCREW SIX ANGLE HEAD |
| 21 | H0060232956 | GRILLE SATINA |
| 22 | H0060125309D | HINGE MID RH |
| 23 | H0060124883A | HINGE BTM LH |
| 24 | H0060600017 | SCREW |
| 25 | H0060241342 | COVER HINGE BTM LH |
| 26 | H0060600097 | SCREW |
| 27 | H0060859013 | WHEEL ASSY FRONT |
| | INCLUDES H0060600017 | SCREW |
| | INCLUDES H0060617132A | FOOT ADJUSTABLE |
| 28 | H0060617132A | FOOT ADJUSTABLE |
| 29 | H0064002286 | SENSOR DOOR FC/VTZ |
| 30 | H0060241343 | COVER HINGE BTM RH |
| 31 | H0060124884A | HINGE BTM RH |
| 32 | H0060401749AH | CABLE POWER AU/NZ |

# EXTERNAL CABINET COMPONENTS

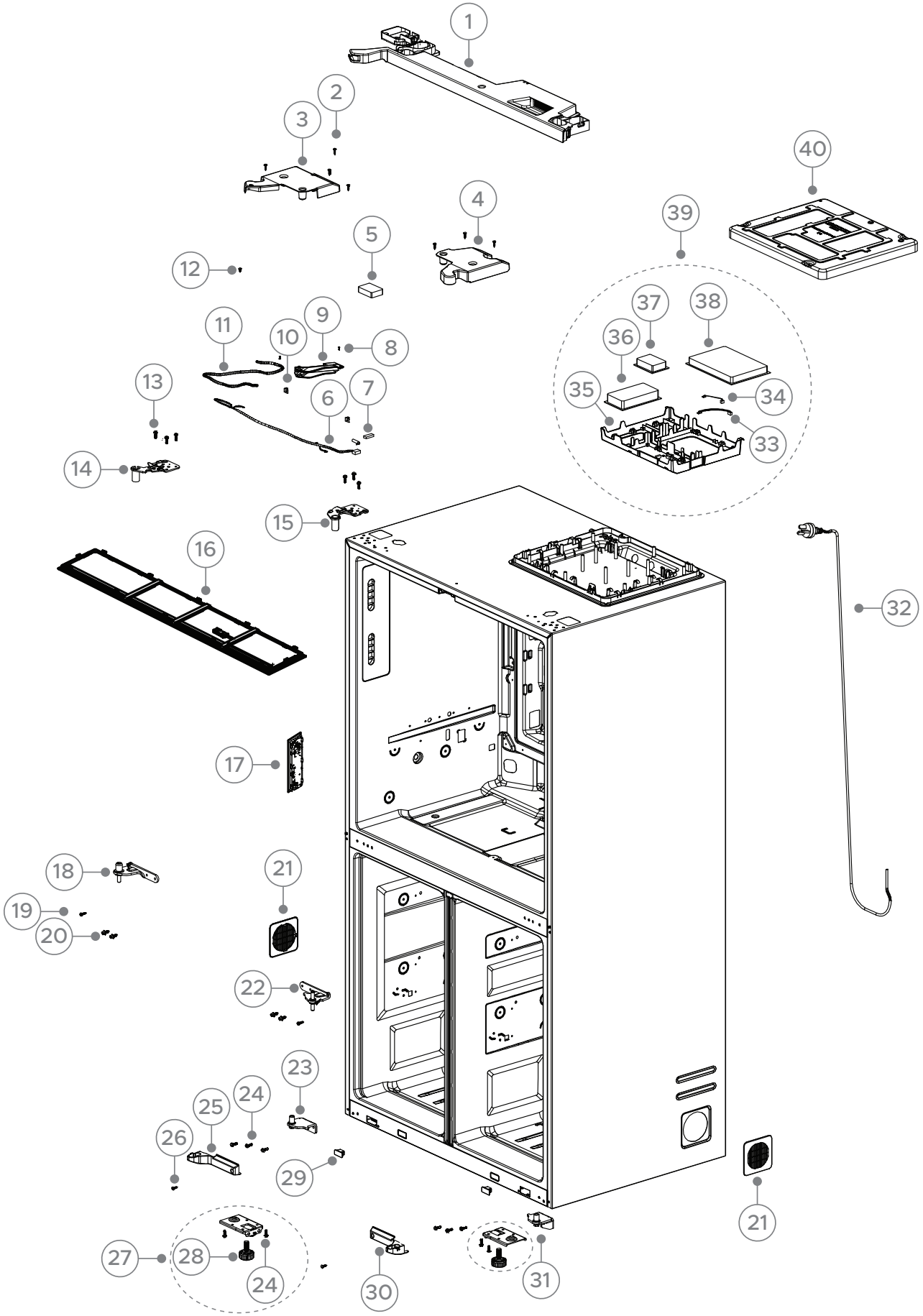


DWG 007547

# EXTERNAL CABINET COMPONENTS

| PART | PART NUMBER | PART DESCRIPTION |
|---|---|---|
| 33 | **H0060404400** | CABLE POWER 220V |
| 34 | **H0060404399D** | CABLE 12V |
| 35 | **H0060233826** | HOUSING CONTROLLER MAIN |
| 36 | **H0061800501** | BOARD POWER |
| 37 | **H0061800598B** | BOARD ELEC SOURCE FR4 |
| 38 | **H0061801175Y** | BOARD CONTROL MAIN |
| 39 | **H0060866736AR** | BOARD CONTROL ASSY |
| | INCLUDES H0060404400 | CABLE POWER 220V |
| | INCLUDES H0060404399D | CABLE 12V |
| | INCLUDES H0060233826 | HOUSING CONTROLLER MAIN |
| | INCLUDES H0061800501 | BOARD POWER |
| | INCLUDES H0061800598B | BOARD ELEC SOURCE FR4 |
| | INCLUDES H0061801175Y | BOARD CONTROL MAIN |
| 40 | **H0060125087** | COVER CONTROLLER |

1 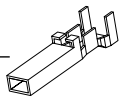 JST SOCKET TERMINAL

2 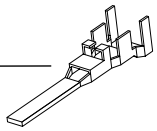 JST PIN TERMINAL

3 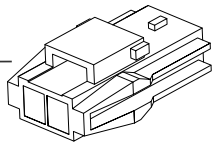 JST SOCKET

4 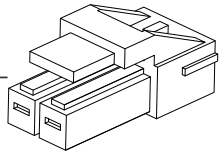 JST PLUG

5 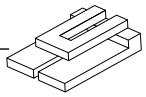 JST RETAINER

# TERMINAL, PLUGS & SOCKETS

| PART | PART NUMBER | PART DESCRIPTION | COMMENTS |
|---|---|---|---|
| 1 | 819607P | TERMINAL SYF-01T PKT 10 | 26/20 AWG |
| | 819608P | TERMINAL SYF-41T PKT 10 | 20/16 AWG |
| 2 | 819609P | PIN/TERM SYM-01T PKT 10 | 26/20 AWG |
| | 819610P | PIN/TERM SYM-41T PKT 10 | 20/16 AWG |
| 3 | 819615 | JST SOCKET 2PIN YLR-02V | |
| | 819616 | JST SOCKET 3PIN YLR-03V | |
| | 819617 | JST SOCKET 4PIN YLR-04V | |
| | 819618 | JST SOCKET 6PIN YLR-06VF | |
| | 819619 | JST SOCKET 8 PIN YLR-08V | |
| 4 | 819611 | JST PLUG 2PIN YLP-02V | |
| | 819612 | JST PLUG 4PIN YLP-04V | |
| | 819613 | JST PLUG 6PIN YLP-06V | |
| | 819614 | JST PLUG 8PIN YLP-08V | |
| 5 | 819620 | RETAINER 2 WAY YLS-02V | |
| | 819621 | RETAINER 3 WAY YLS-03V | |
| NI | 150807 | TERMINAL REMOVAL TOOL | |
| | 855288 | EXTRACTION TOO M ML AMP 1897271 | |

# REAR CABINET COMPONENTS

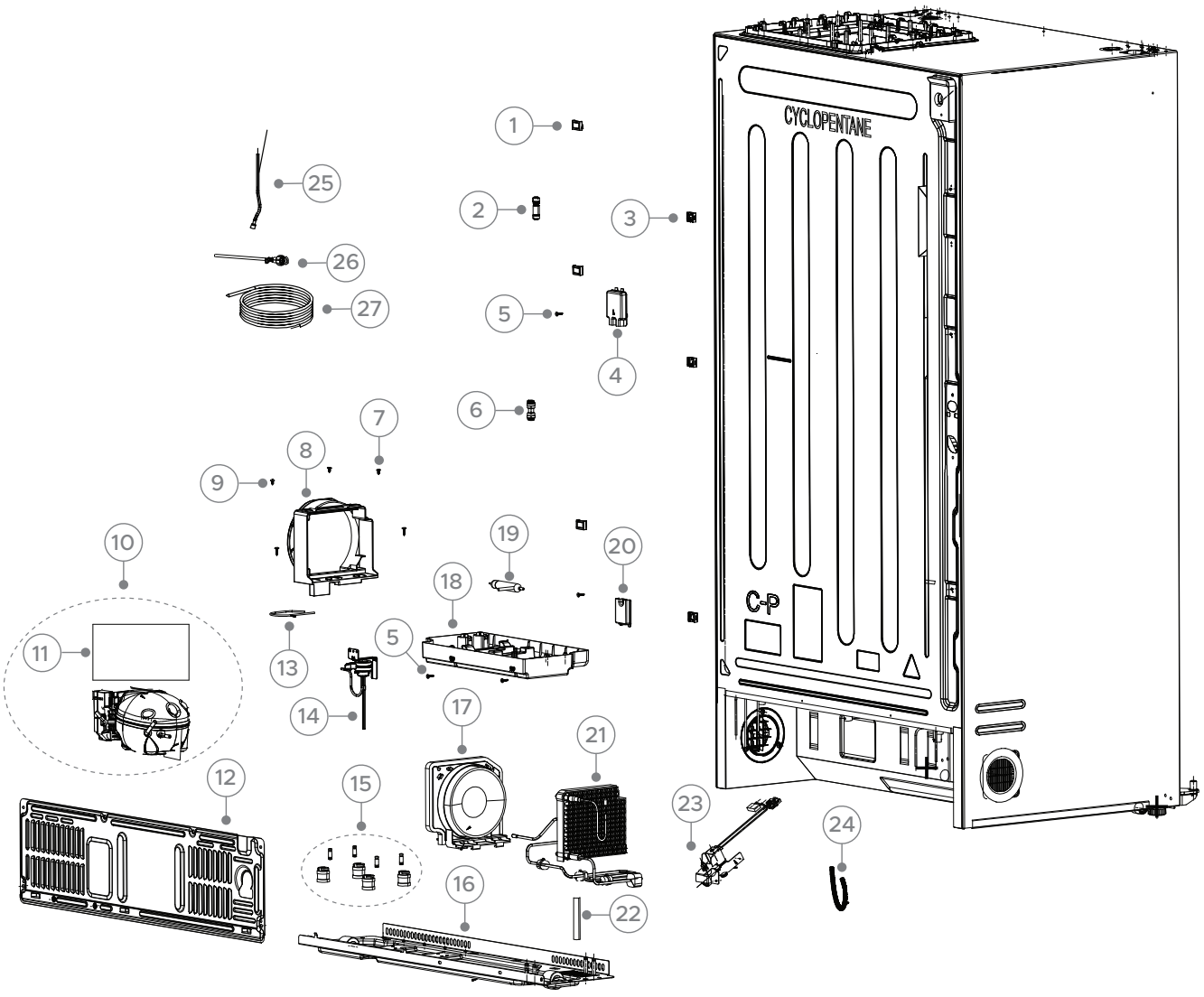


DWG 007548

# REAR CABINET COMPONENTS

| PART | PART NUMBER | PART DESCRIPTION |
|---|---|---|
| 1 | H0060251570A | SPACER WATER PIPE ABS |
| 2 | H0060248197A | PLUG CONNECTOR QUICK |
| 3 | H0060251569 | SPACER PIPE WATER PP |
| 4 | H0060215262 | COVER FILTER |
| 5 | H0060600097 | SCREW |
| 6 | H0060236007 | CONNECTOR WATER |
| 7 | H0060600186 | SCREW FLAPPER |
| 8 | H0060249387 | COVER CONDENSER MICROCHANNEL |
| 9 | H0060600097 | SCREW |
| 10 | H0060707413E | COMPRESSOR VARIABLE 220 2240V |
| | INCLUDES H0061800484F | BOARD INVERTER |
| | INCLUDES | COMPRESSOR |
| 11 | H0061800484F | BOARD INVERTER |
| 12 | H0060850056 | COMPRESSOR COVER |
| 13 | H0060703766 | CONNECTOR SUCTION TUBE |
| 14 | H0064001912 | VALVE REFRIGERANT |
| 15 | H0060705946F | KIT GROMMET AND POST |
| | INCLUDES | GROMMET X 4 |
| | INCLUDES | POST X 4 |
| 16 | H0060853327B | PLATE BASE COMPRESSOR |
| 17 | H0060852717 | FAN CONDENSER |
| 18 | H0060249386 | TRAY EVAPORATOR |
| 19 | H0060702808 | DRIER FILTER |
| 20 | H0060251755 | COVER PIPE COLD WATER |
| 21 | H0060705884G | CONDENSER MICROCHANNEL |
| 22 | H0060732763 | INJECTION TUBE |
| 23 | H0064002381A | ISOLATION VALVE |
| 24 | H0060163462A | WATER PIPE SPRING II |
| 25 | H0060127894E | TUBE MAINS .8MTR 7/16 INCH |
| 26 | H0060124530 | TUBE VALVE .8MTR 1/2 INCH |
| 27 | H0060222973G | TUBE WATER 4M |

FISHERPAYKEL.COM

© Fisher & Paykel Appliances 2026. All rights reserved.

The models shown in this guide may not be available in all markets and are subject to change at any time.

The product specifications in this guide apply to the specific products and models described at the date of issue. Under our policy of continuous product improvement, these specifications may change at any time.

For current details about model and specification availability in your country, please go to our website or contact your local Fisher & Paykel dealer.

**27022-A 11.26**